RADIO SERVICE BULLETIN

Issue: No. 83
Date of Issue: March, 1952
Subject: Model A4100 RB/4

SPECIFICATIONS OF S.T.C. MODEL A4100 RB/4 RADIO PHONOGRAPH (TABLE)

CIRCUIT: Four valve, A.C. operated superheterodyne with A.V.C. and reflex amplifier. Uses converter, combined I.F. amplifier-detector-audio amplifier, power output pentode and H.T. rectifier, Radiophono switch. Power Switch on Volume Control.

TUNING RANGE:
530-1620 Kc/s.

INTERMEDIATE FREQUENCY:
455 Kc/s.

VALVE COMPLEMENT:
V1 Frequency changer 6BE6.
V2 I.F. amplifier-detector-audio amplifier 6B8G.
V3 Power output 6BW6.
V4 H.T. rectifier 6X5GT.

POWER SUPPLY:
200-240 volts, 40-60 cycles A.C.
185 M.A. with 240 volts input on radio.
280 M.A. with 240 volts input on phono.

LOUD SPEAKER:
Permag 6 inch, 5000 ohm transformer.

CIRCUIT VOLTAGES:

	PLATE		† SCREEN		CATHODE		HEATER
	Radio	Phono	Radio	Phono	Radio	Phono	
V1	225	0	100	0	—	—	6.2
V2	90	100	60	30	—	—	6.2
V3	245	250	225	250	10	11	6.2
V4	250/250	250/250	—	—	260	270	6.2

These voltages must be measured to receiver earth with voltmeter having a resistance of at least 1000 ohms per volt (Tolerance ±5%). Volume control must be turned to maximum.
When measuring I.F. sensitivity a .1 MFD condenser should be used between the "Hot" signal generator lead and the Grid of V1. Do not disconnect any wiring.

MEASUREMENT SPECIFICATION:
I.F. Sensitivity—V1 grid 80 microvolts.
Broadcast Sensitivity—25 microvolts average.
These figures are related to an audio frequency output of 14 volts measured between plate of V3 and B + maximum, through a series condenser of .1 MFD capacity.

ALIGNMENT FREQUENCIES:
1400 Kc/s and 600 Kc/s.

CHECK POINT:
1000 Kc/s.

MODEL A4100RB/4

RADIO PHONOGRAPH (TABLE)

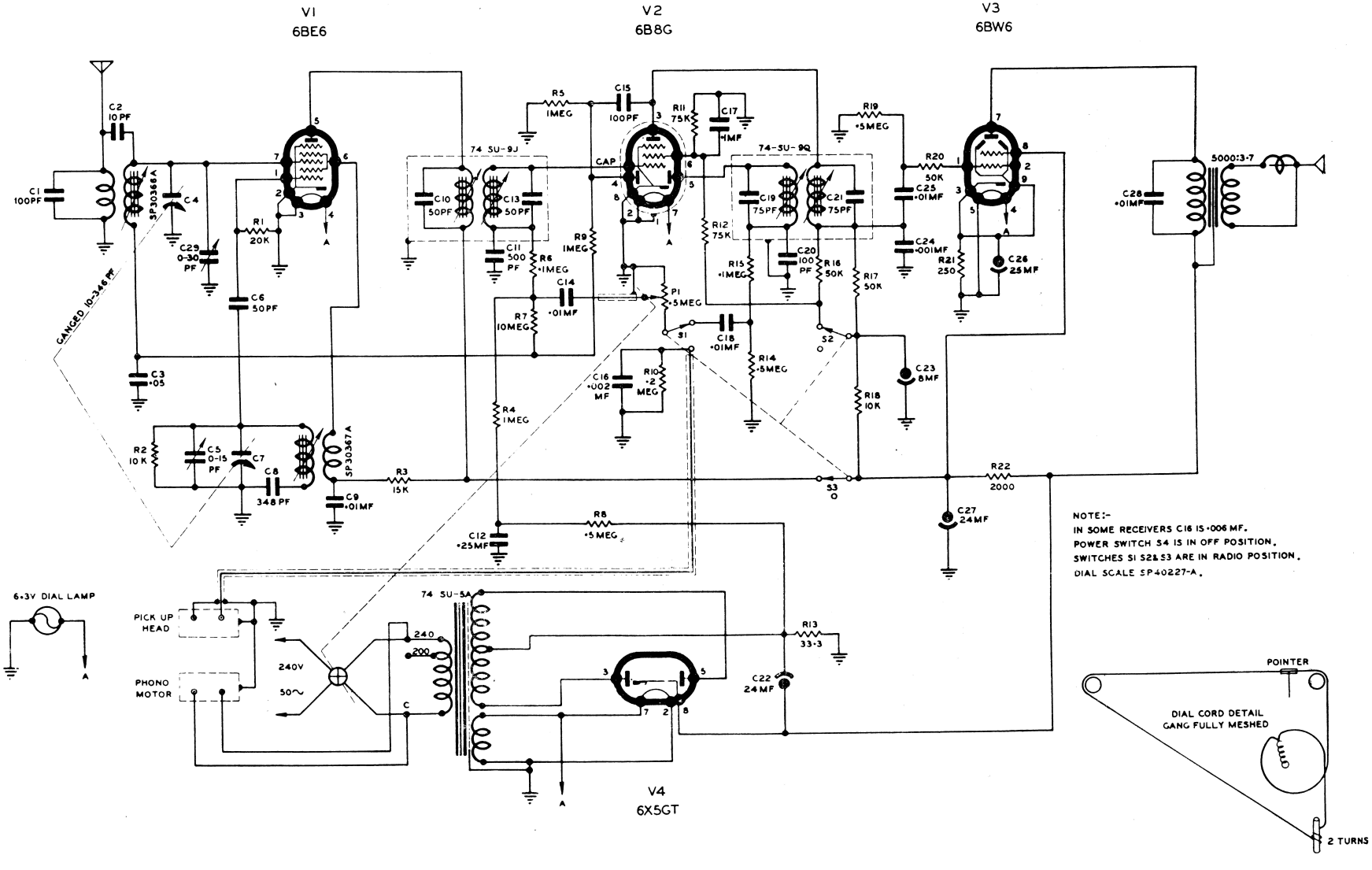

NOTE:-
IN SOME RECEIVERS C16 IS ·006 MF.
POWER SWITCH S4 IS IN OFF POSITION.
SWITCHES S1 S2 & S3 ARE IN RADIO POSITION.
DIAL SCALE SP40227-A.